Landscape BRANDS™

FUSION COATINGS™

D1029 6′ Perforated Steel, Ultra Contour Bench, In Ground Mount

6′ perforated steel contour bench, in ground mount

Material
The bench is 72.38″ long. The contour seat is made of 12-gauge perforated steel with a .63 diameter uniform hole pattern. The bench is plastisol coated with an average thickness of 93 mils (.093 inches) and finished with a high-gloss patented TopCoat®. The bench seat will support 200 lbs per linear foot.

The legs are made of 2.38″ OD steel tubing, protected with FusionGuard® rust protection and are finished with a high-gloss powder coat. They are designed to be mounted 12.13″ deep for a sturdy support.

Finish
TopCoat patented high-gloss finish resists UV deterioration, mildew, staining and fading.

The TopCoat finish has been tested to the requirements of ASTM E 1354 and is determined to be in compliance with California Uniform Fire Code 1103.2.1.4.2.

FusionGuard® primer is applied to all of the under supports, providing extreme rust fighting protection and durability. Under supports treated with FusionGuard exceed industry standard by more than 30% in testing by independent sources.

Color
This product is available in the following colors: Black, Blue, Bronze, Brown, Burgundy, Camel, Charcoal, Evergreen, Grey, Navy, Orange, Purple, Red, Sage, Silver, Teal, Vanilla, White, and Yellow. The undersupports are available in the same colors in a rust-resistant powder coat finish.

Assembly
The bench requires minor assembly. The in ground mounting requires site preparation and contsruction of a temporary support.

Maintenance
The product is virtually maintenance-free and requires only periodic cleaning with a sponge and a solution of mild detergent and water to remove surface dirt. Do not clean with solvent or petroleum based products.

Warranty
Fusion Coatings® products are covered by a seven-year warranty from the date of purchase.

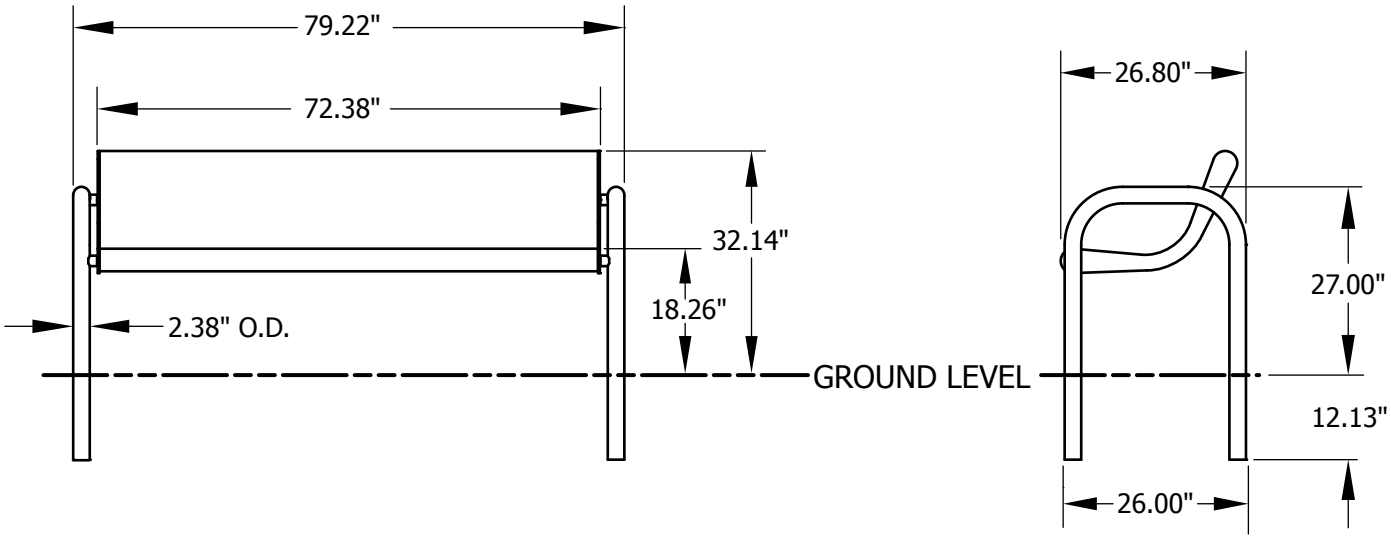

Shipping Information

Unit Wt.	Unit Shipping Wt. UPS	Unit Shipping Wt. Truck	Unit Ship Size w/Pallet	Max Units per Pallet	Pallet Wt. (84 x 36)	Total No. Pkgs	Shipping Class
159 lbs	NA	178 lbs lbs/unit	39 cu. ft.	5	100 lbs	2	70

Made in USA

Revised: 07/10-3

Copyright © 2010 Landscape Brands