D3021 6’ Perforated Metal Flat Bench

Traditional Style Edge, In-ground Mount Legs

specification sheet

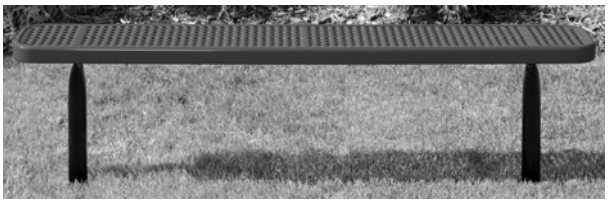

Description
6' plastisol coated, perforated metal flat bench with inground mount legs.

Warranty
Seven-year warranty from shipping date.

Maintenance
Product is virtually maintenance-free and requires only periodic cleaning with a sponge and a solution of mild detergent and water to remove surface dirt. Do not clean with solvent or petroleum base products.

Options
Bench seat available in high-gloss patented TopCoat: Red, Burgundy, Black, Brown, Grey, Evergreen, Teal, Camel, Blue, White, Vanilla, Purple, Yellow, Bronze, Navy, Orange and Silver. Legs available in same colors in a rust-resistant powder coat finish.

Included Items
Includes stainless steel assembly hardware.

Typical Specification
Bench shall be 72.19″ in length overall. Seat shall be 12-gauge perforated steel with a .62″ diameter uniform hole pattern and feature a traditional style rounded edge. Seat shall be plastisol coated with an average thickness of 93 mils and finished with high-gloss patented TopCoat.

Legs shall be 2.38″ OD steel tubing protected with FusionGuard rust protection and shall be finished with high-gloss powder coat. Recommendation for inground mounting: 19.75″ of the leg tubing shall be installed below ground into concrete footings.

Technical Data
TopCoat® -- patented high-gloss finish resists UV deterioration, mildew, staining and fading.

TopCoat® -- tested to the requirements of ASTM E 1354 and determined to be in compliance with California Uniform Fire Code 1103.2.1.4.2.

FusionGuard® -- process that ensures all components of under supports are coated with a zinc-rich primer. Under supports treated with FusionGuard resist rust four times longer than conventional powder coat finishes in independent testing.

Assembly
Bench requires minor assembly.

Availability
Ships in 10 business days on quantities of 6 or less.

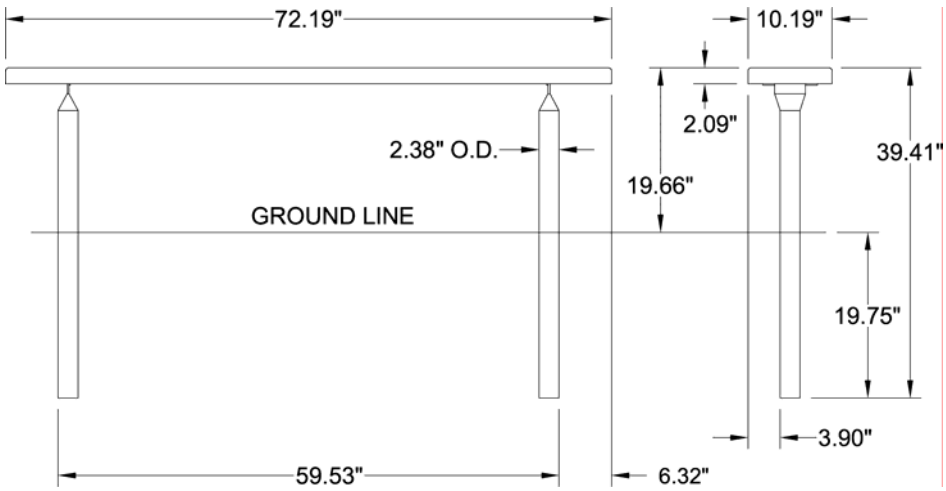

Model	Overall Length	Leg Style	Height	Unit Wt.	Ship. Wt.	Cubic Feet	Total Packages	Shipping Class
D3021	72.19″	Inground Mount	19.66"	59 lbs.	163 lbs.	20	2	70

Measurements are nominal.

Created 7/19/05. Last modified 12/6/07.

Landscape Brands®
Expect More.