902-290 6′ Sectional Slide

Rev. 1/22/04

IMPORTANT

PLEASE READ THESE INSTRUCTIONS BEFORE COMMENCING ASSEMBLY. All equipment must be installed in accordance with these instructions. Check your shipment against Bill of Lading and Parts list. Any missing or broken parts must be reported to your distributor within 10 days of receipt of your order. When properly installed and maintained, equipment will give many years of Safe, Trouble-Free use. Periodically check for loose or broken parts. Loose bolts must be tightened and broken parts must be replaced as they can possibly create dangerous situations leading to unnecessary accidents. Resilient Surfacing should be used under all playground equipment. Appropriate publications, available at no charge, from the Consumer Product Safety Commission, include "A Handbook for Public Playground Safety". You can receive your free copy by calling 1-301-504-7908.

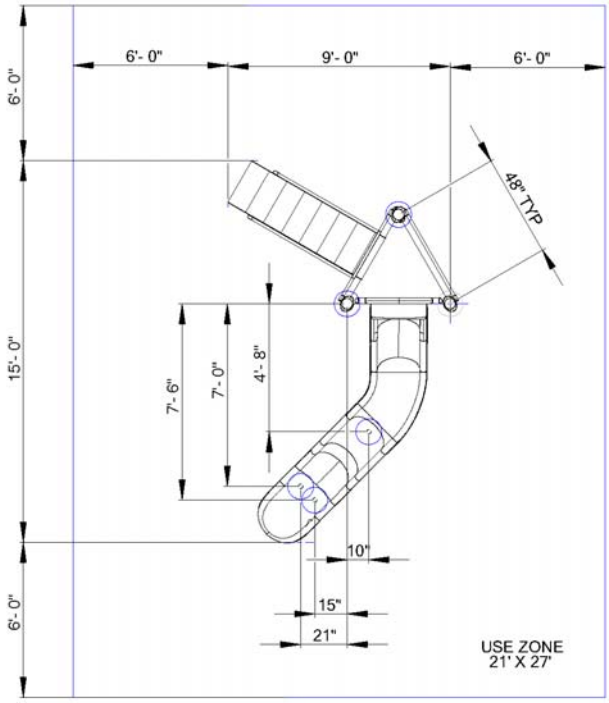

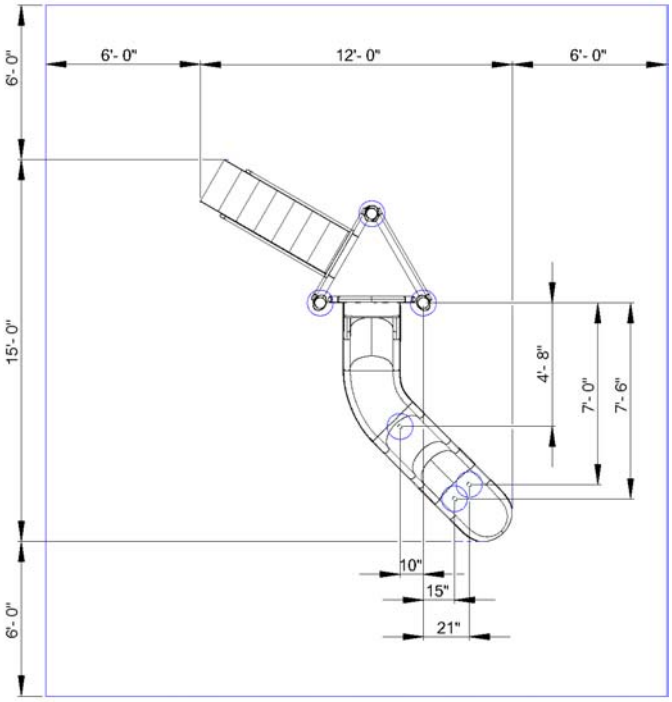

PACKING LIST

1		Hardware Bag
1		6′ Sectional Slide
12	903-001	Pipe Clamp
3	903-002	Deck Clamp
1	903-141	Spiral Slide Z Bracket
2	903-214	T Slide Leg
1	903-286	Slide Center Support
1	903-306	Arch Entry Panel
1	903-324	Step Leg
2	903-327	Hand Rail
1	905-710	Triangle Deck
1	905-712	6′ deck steps
3	913-112	Post 12′6″
1	913-115	Slide Guard 48″
1	913-117	Ten Rung Wall

HARDWARE BAG

2	126-701	3/8″ x 1 ¼″ Button Head Bolt
11	126-702	3/8″ x ¾″ Button Head Bolt
2	226-602	3/8″ Nylon Insert Lock Nut
15	316-601	3/8″ Flat Washer
1	805-532	Warning Label
1	805-534	SportsPlay Label
1		Maintenance Checklist

1 SKID	1 SLIDE	2 TOTAL PCS	953 # Weight	Class 70

S

902-290 6′ Sectional Slide

GENERAL USE/FALL ZONE & FOOTING RECOMMENDATIONS

Stationary & Portable equipment – Use/Fall zones should extend a minimum of 6 feet in all directions from the perimeter of the equipment ground space. This area should be covered with the required amount of resilient safety surfacing material.

For some equipment – Use/Fall zones can overlap. See Consumer Product Safety Commission Guidelines. Diameter and depth of footings illustrated are satisfactory in most applications for pipe sizes up to 2 3/8″ diameter. Varying soil & climatic conditions may require deeper and heavier footings in some areas. Check local building codes.

IF RESILIENT SURFACING IS TO BE LESS THAN 12″, THEN ADDITIONAL PIPE SHOULD BE PUT IN CONCRETE TO MAINTAIN PROPER FINISH GRADE FOR EQUIPMENT.

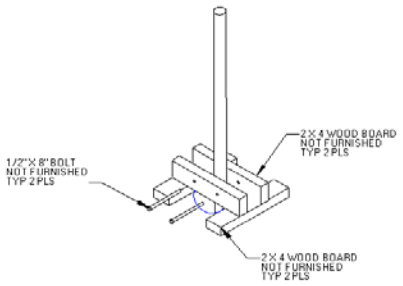

USE AREA AND FOOTING LAYOUT:

(see page 1)

GENERAL ASSEMBLY INSTRUCTIONS:

Check all the parts and hardware with the packing list to be sure you have received everything needed to assemble this product. CONTACT YOUR LOCAL DISTRIBUTOR with notification of any missing or damaged parts. Contact MUST be made within ten days of receipt of your order. Only hand-tighten nuts & bolts on initial assembly. Final tightening should be done EVENLY after final assembly when unit has been plumbed & leveled.

GENERAL MAINTENANCE INSTRUCTIONS:

Check MONTHLY for loose bolts, damaged or broken parts.

ASSEMBLY AND INSTALLATION:

NOTE: All threaded ends of bolts protruding beyond nuts must be cut off and/or peened to eliminate sharp edges. No more than two threads should extend beyond face of nut. All washers, "T" nuts, and other fastener hardware used on round pipe or tubing must be hammered down to conform to the curved underlying surface to eliminate catch points. DO NOT tighten nuts more than hand-tight until entire assembly is completed.

NOTE: Slides should be installed in shaded areas or face NORTH to prevent direct sun on slide's chute.

NOTE: Plumb and level entire unit. Tighten all nuts & Bolts until lock washers are flat. Use short length of pipe on end of socket Key to add leverage when tightening Socket Set Screws. Pour Concrete. Dome top of cement for proper drainage. Wait 48 hours before removing braces, applying resilient surfacing and using equipment.

NOTE: Attach warning label and Manufacturer's Identification label to a clean surface. The labels should be attached in a location where they are clearly visible and legible and away from normal hand and foot placement areas. The labels must be replaced if they become illegible, destroyed or removed. Contact your SportsPlay distributor for replacements.

Installing deck clamps

Install deck clamps to the center of the deck corners. If clamps are off center, then the line of posts will not be straight, nor will components connect correctly. Picture shows deck clamp being tightened to post with a 3/8″ X 1 ¼″ Button Head bolt with a "T" nut on the deck side of the clamp. DO NOT over tighten. If too tight the post will "swing." Tighten when post is level.

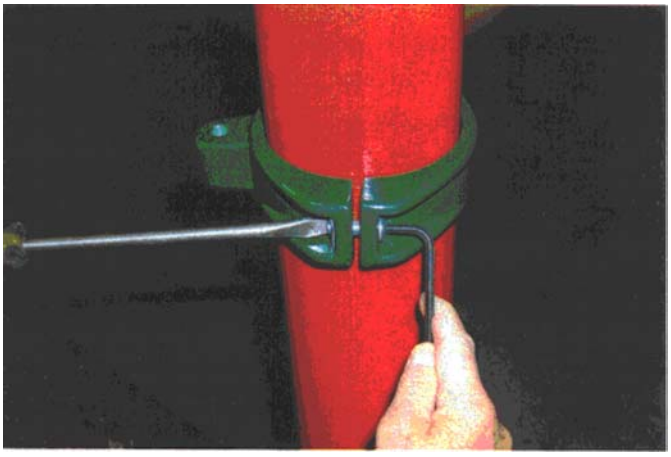

Decks attach to deck clamps using ½″ X 2 ½″ Button Head bolts washer on top and bottom, with ½″ lock nuts. Connect the deck bolt firmly.

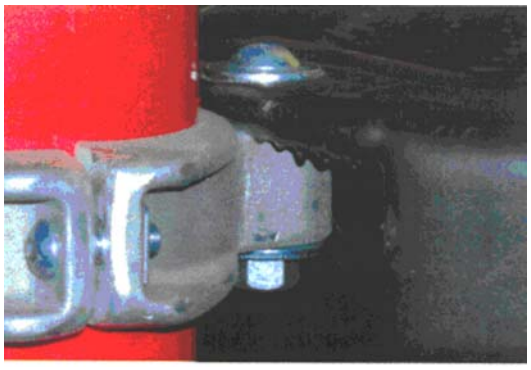

Additional information on deck clamp and deck installation can be found in the section entitled, "Building the First Deck."

Building the first deck:

Lay deck on ground, use deck as "jig". Place (4) deck clamps, one per corner, spray paint through middle of clamp onto ground. These will be the centers of the postholes. Remove deck and clamps. Dig the (4) holes 22″ deep and 12″ wide. Holes are straight down and flat-bottomed. Install 10″ diameter plywood in hole bottoms.

S

Deck clamp set to corners

Dig first four holes

Use marker to mark 22″ from bottom of posts. Use these marks so you can run a 4′ level across marks to make sure the tops of the posts are equal to each other. If line marks are on bubble, then post tops should be on bubble to each other.

Mark 22″ from bottom of posts.

S

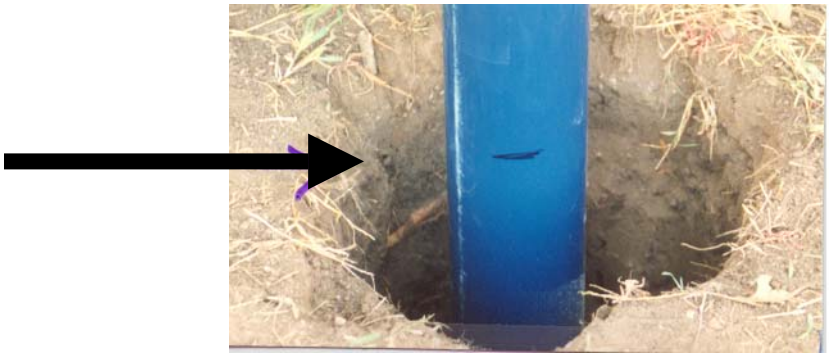

Install red plastic end caps on post bottoms. Install 10″ square plywood squares in bottom of holes. Since your holes are 12″ diameter and posts are centered in holes you have approx. 3.5″ all around the post. Block the posts into center of holes when posts are on bubble. Use scrap lumber and wedges to solidify the posts in their holes as you level the posts. Re-blocking may be necessary at times in order to achieve level. You may also have to widen your holes if they are not dug center.

Tighten deck and clamp hardware as you achieve level on all four posts and

sides of your deck-top.
When you go to install the deck, there are two methods you can use. The BEST

method is to make a table or stand to place your deck on at the required deck height. The table will stabilize the deck so you can level it. Below is a typical table. This one can be lowered or raised. You can make a table from sawhorses. **Remember, you must raise the deck to compensate for the resilient surfacing you will use.** With the deck resting on the table, you can spend

S

time leveling your posts to achieve bubble. Deck stand or table holds deck while you build around it.
Blocks stabilize the posts while table stabilizes the deck.

The secon so that there is 42 ¼" between the holes in the deck clamps. Use a level and a marker to make sure the clamps are level to each other. Then place deck onto clamps and bolt. This method works but is less stable than the first method. The deck and posts will stabilize more as you add components
Pre-install deck clamps and level.

Use ¼" Allen wr ut. "T" nut is on deck side of clamp so as to make tightening easier. When all (4) clamps have been installed, posts and deck level, install roll pins.

S

Use magnetic levels on all sides of the round posts. Always adjust the posts into level by gently bumping the bottom with a construction bar. Trying to push the posts into "bubble" in the top or middle will throw off your previous work. Adjust the post levels carefully, not roughly.

When all (4) posts are plumb and stable, drill through the deck clamps and

into the posts with a ½" metal drill bit. Install the bolts so they are "flush" with the posts.

Attaching decks

Install the ½" by 2 ½" button head bolt with washer on top and on bottom under ½" lock nut. Medium tighten to the corner. Drill through the vinyl coating with ½" metal bit if necessary (fit may be tight).

S

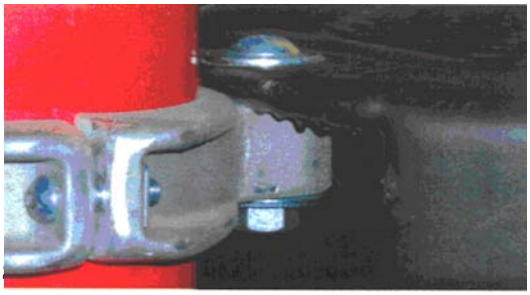

TYPICAL DECK DEMENSION
Decks are 48″ square

A. Diagonal distance between post holes = 67.5″
B. Center to center between posts = 48″
C. Distance between bolt holes in deck clamps = 42 ¼″

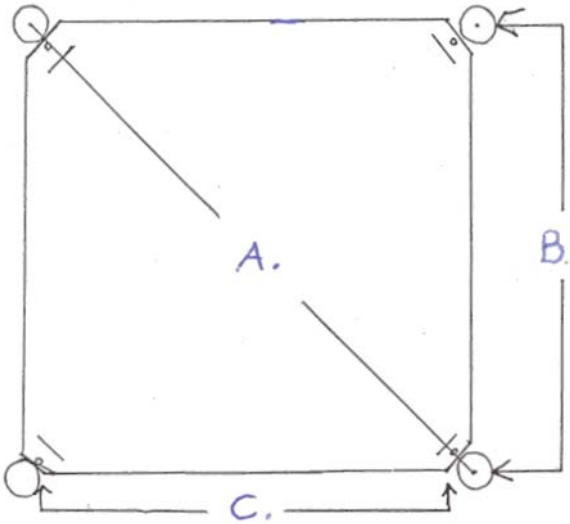

ompleted deck and (4) posts. Deck and post are vertically and horizontally level and clamps are tight. Posts are center to deck corners. Roll pins are installed. Avoid standing on decks until the addition of more components and decks allow the work to become more stable. When this happens, walk gently on decks. Usually a smaller person should work on decks. You may use a stepladder to work on the outside of the decks while a person stands on deck.

Posts must be blocked solidly for a stable, ongoing installation. Blocking to be removed just before concrete is installed.

A

B

PARTS LIST

Ref	Description	QTY
A	Wall	1
B	Clamps	4
	Hardware	

MAINTENANCE:

- Touch up any marred paint surfaces.
- Periodically check hardware for integrity and tightness.

Event: Ten rung walls act as a barrier to prevent falls from decks. Horizontal pipes that fit into post clamps are 1 3/8" O.D. Vertical pipes are 1" O.D.

Paint: shall be electrostatically applied polyester dry powder coating

Hardware: shall be a combination of zinc-plated, stainless steel and aluminum.

FOOTING DIAGRAM:

INSTRUCTIONS:

- The ten rung wall is 48" wide and attached with (4) clamps making sure you have evenly spaced the wall on both sides making sure there is less than 3 ½" between the post and end rungs. Test with torso probe.
- It is attached on the "deck side" of the deck posts with the top rail 38" minimum over the deck surface making sure there is less than 3 1/2"' between the deck surface and the bottom of the wall. Test with torso probe.
- Follow the step-by-step directions.
- If mounted outside the posts or off the deck surface there has to be a maximum of 3.5" between the bottom of the wall and the top of the deck.
- It is a good idea to put a couple of equal sized shims under the wall while installing.
- Level the wall.
- Review the clamp instructions for sideways attachment of clamp.

PARTS LIST

Ref	Description	QTY
A	Stepladder	1
B	Stepladder Bottom Leg	1
C	Stepladder Arch Entry	1
D	Pipe Clamps	4
E	Handrails	2

Event: Connects to 3', 4', 5' deck, 7 ¼" step and 8 ½" riser is #9 ga. expanded metals, top and bottom angle connection to deck and ground with ground legs. Entire ladder is PVC coated after fabrication. Arch entry wall is 1 3/8" O.D. steel with (4) clamps to connect.

Paint: shall be electrostatically applied polyester dry powder coating

Hardware: shall be a combination of zinc-plated, stainless steel and aluminum.

MAINTENANCE:

- Touch up any marred paint surfaces.
- Periodically check hardware for integrity and tightness.

FOOTING DIAGRAM:

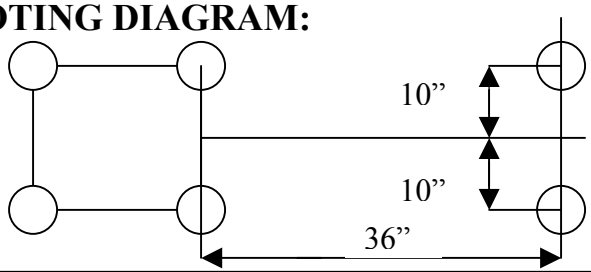

3'steps
*36" for 4'steps
48" for 5' steps

INSTRUCTIONS:

- Temporarily lay the angle-lip of stepladder onto deck so that there is a 90-degree connection. Center it over the 15" apart holes on top of deck.
- Mark on ground for the two bottom legs (20" apart).
- Remove ladder and dig two holes 12" wide and 24" deep.
- Connect the bottom leg with (2) 1 ¼" x 3/8" button head bolt, washer on top and lock nut on bottom.
- Install (2) re-bar in bottom leg pipes and install assembly into ground holes.
- Tip up to deck and connect to deck holes (on top of deck) with (2) 3/8" by 2" button head bolt, one washer on top and one on bottom, and lock nut.
- Connect the arch entry to the "outside" of the posts with (4) pipe clamps. DO NOT tighten the clamp hardware yet.
- Connect the left and right handrails so that the top end (end with no holes) goes into the pipe sleeves on the arch entry.
- Line up the bottom of the handrail (2 per side) to the holes in the bottom side of stepladder.
- Connect these with (4) 3/8" by 2" button head bolts, no washer on the inside of the ladder, through ladder, then fasten with 3/8" lock nut.
- Tighten until lock nut is flush with thread end of bolt.
- Make sure arch entry clamps are level to each other and tighten.
- Fasten top portion of handrails with 3/8" by 3/8" setscrew.