581-702 5″ OD Arch Post Swing 8′ 2 Seat

Rev. 09/22/2004

IMPORTANT

PLEASE READ THESE INSTRUCTIONS BEFORE COMMENCING ASSEMBLY. All equipment must be installed in accordance with these instructions. Check your shipment against Bill of Lading and Parts list. Any missing or broken parts must be reported to your distributor within 10 days of receipt of your order. When properly installed and maintained, equipment will give many years of Safe, Trouble-Free use. Periodically check for loose or broken parts. Loose bolts must be tightened and broken parts must be replaced as they can possibly create dangerous situations leading to unnecessary accidents. Resilient Surfacing should be used under all playground equipment. Appropriate publications, available at no charge, from the Consumer Product Safety Commission, include “A Handbook for Public Playground Safety”. You can receive your free copy by calling 1-301-504-7908.

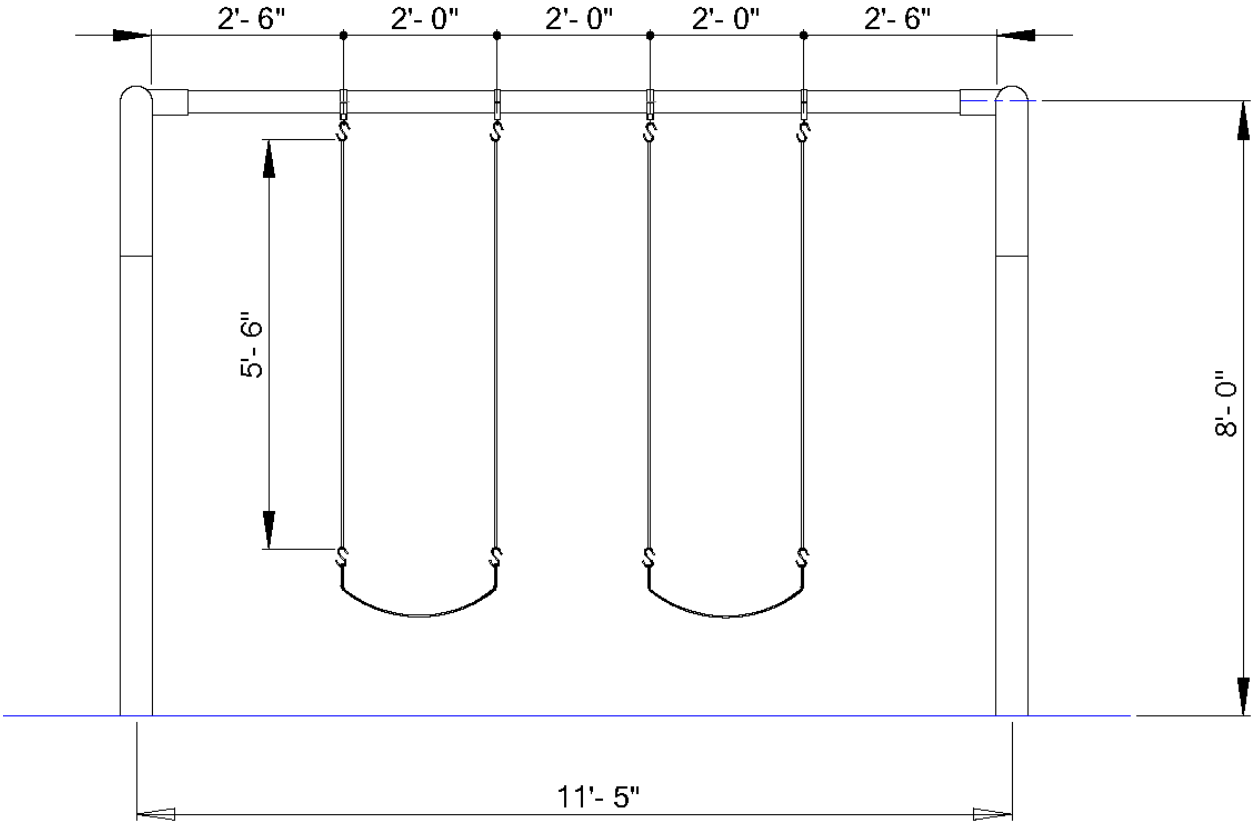

PACKING LIST

1	CTN		Hardware Bag
1	PIPE	583-211	3 ½″ x 11′ pipe
2	WF	583-572	Arch End Fitting

HARDWARE BAG

4	585-521	3 ½″ Swing Hanger
2	585-955	Cut Proof Belt Seat
4	317-140	4/0 Chain 5′6″
8	585-901	S Hook
4	196-803	½″ x ½″ Socket Set Screw
1	416-400	¼″ Socket Key
1	805-532	Warning Label
1	805-534	SportsPlay Label
1		Maintenance Checklist

1 CTN	1 PIPE	2 WF	TOTAL PCS=1 SKID	591# WT	Class 70

SportsPlay Equipment, Inc., 5642 Natural Bridge, St. Louis, MO 63120 (314) 389-4140
www.sportsplayinc.com

581-702 5” OD Arch Post Swing 8’ 2 Seat

GENERAL FOOTING RECOMMENDATIONS

Diameter and depth of footings illustrated are satisfactory in most applications for pipe sizes up to 2 3/8” diameter. Varying soil & climatic conditions may require deeper and heavier footings in some areas. Check local building codes.

DETAIL-Permanent Installation

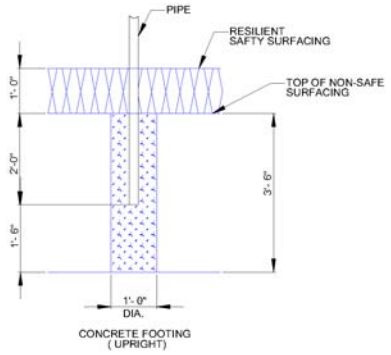

Suggested Bracing Method

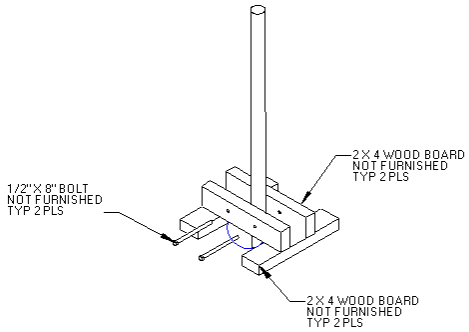

IF RESILIENT SURFACING IS TO BE LESS THAN 12”, THEN ADDITIONAL PIPE SHOULD BE PUT IN CONCRETE TO MAINTAIN PROPER FINISH GRADE FOR EQUIPMENT.

USE AREA AND FOOTING LAYOUT:

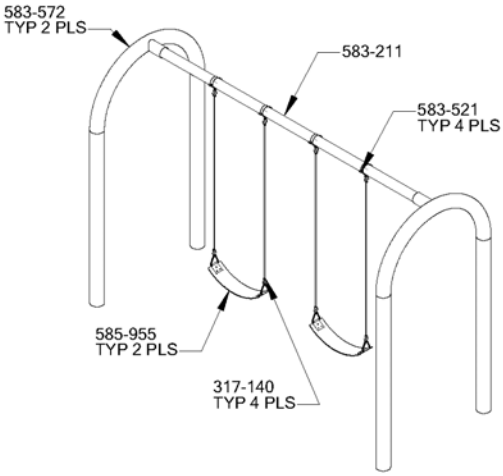

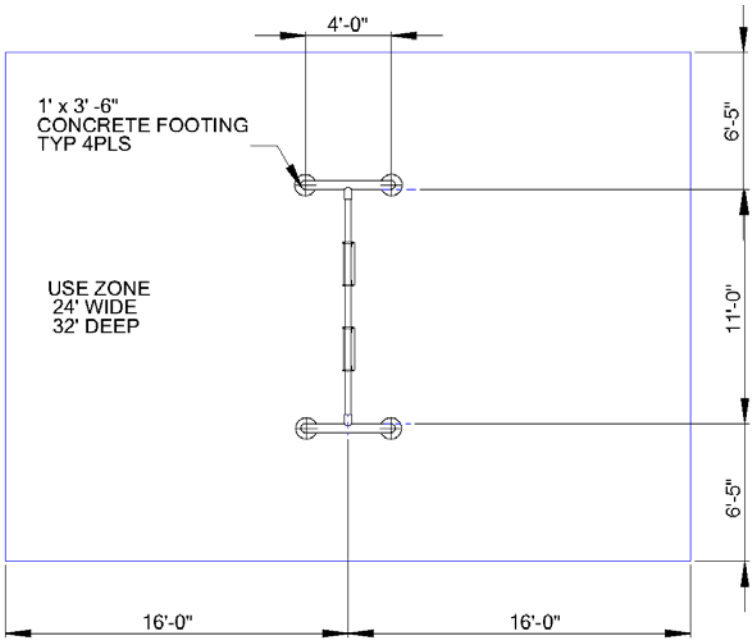

Single Axis Swings:

The Use/Fall Zone should extend to the front & rear, a minimum distance of twice the height of the Top Rail above the resilient surfacing material. The Use/Fall Zone to the sides should follow the general recommendations of six feet minimum. This six-foot zone may overlap that of an adjacent swing structure.

Rotating Swings:

The Use/Fall Zone should extend in all directions the length of the swing plus six feet. The six-foot minimum fall zone from the supporting structure also applies, and may overlap the six-foot zone of an adjacent swing structure.

GENERAL MAINTENANCE INSTRUCTIONS:

Check MONTHLY for loose bolts, damaged or broken parts. Tighten and/or replace immediately. On swings and any equipment that uses S-hooks and/or Swing Hangers check the bearing surfaces for wear. Replace any parts that show a reduction of 25% from the original size.

ASSEMBLY AND INSTALLATION:

NOTE: **All threaded ends of bolts protruding beyond nuts must be cut off and/or peened to eliminate sharp edges. No more than two threads should extend beyond face of nut. All tubing must be hammered down to conform to the curved underlying surface to eliminate catch points. DO NOT tighten nuts more than hand-tight until entire assembly is completed.**

STEP #1: Assemble swing frame on side, on ground. If more than one section, assemble section by section. Layout parts so that when frame is erected, legs will be in approximately correct position.

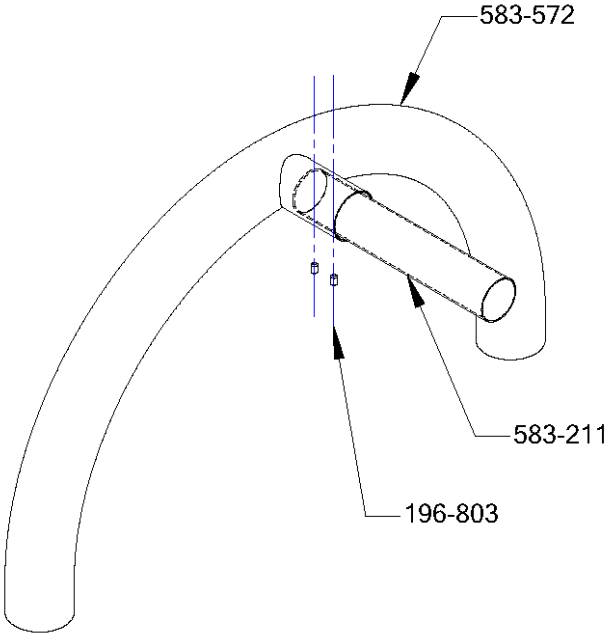

STEP #2: Remove swing hanger pendulums from the swing hanger assemblies. Using S-hooks, attach seats to chain and chain to swing hanger pendulums. Close the S-hooks to within .034” (1/32”) using S-hook pliers.

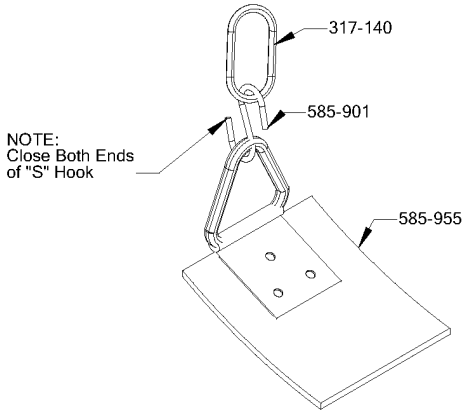

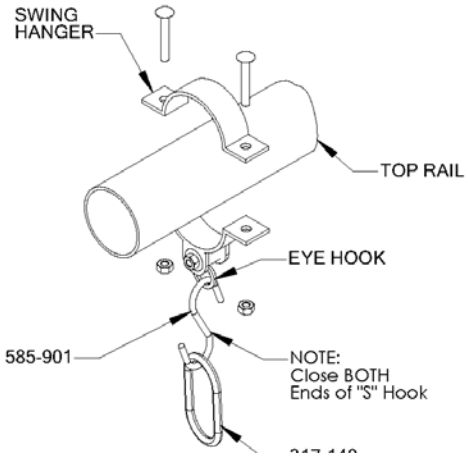

STEP #3: Assemble top portion of swing hangers on top rail following spacing on page 1 diagram.

STEP #4: Footing holes may be marked out and dug from footing layout, however, it is easier to position swing in proper location, mark holes, move swing aside, and dig holes.

STEP #5: Stand swing upright onto legs and brace in footing holes so that 2’ – 3’ of pipe will be under intended level of resilient surfacing and top rail is at desired height.

STEP #6: Plumb and level entire unit. Tighten set screws by using short length of pipe on end of socket key to add leverage. Pour concrete. Crown surface. Wait 48 hours before removing braces and using equipment.

STEP #7: Attach assembled seats to swing hangers by reattaching the pendulums to the swing hangers. Do not over tighten bolt on pendulum. Hangers must move freely.

STEP #8: Attach warning label and Manufacturer’s Identification label to a clean surface. The labels should be attached in a location where they are clearly visible and legible and away from normal hand and foot placement areas. The labels must be replaced if they become illegible, destroyed or removed. Contact your SportsPlay distributor for replacements.