Landscape BRANDS™

Landscape FUSION™

F1321 Rectangular ADA Picnic Table, Bench Seats W/Backs, Portable Mount

8′ expanded steel ADA picnic table, traditional edge, flat bench seats with backs, portable mount

Material
The table is 96.19″ in length and features two flat bench seats with backs. The tabletop and seats are 3/4″ #9 expanded steel with a diamond shape and feature a traditional edge. Tabletop and seats are plastisol coated with an average thickness of 93 mils (.093″) and are finished with high-gloss patented TopCoat®. The tabletop is designed to support 100 lbs per square foot and the seats will support 200 lbs per linear foot.

The frames are made of 2.38″ O.D. steel tubing protected with FusionGuard® rust protection. Frame is portable in design allowing for flexibility in placement.

Finish
TopCoat patented high-gloss finish resists UV deterioration, mildew, staining and fading.

The TopCoat finish has been tested to the requirements of ASTM E 1354 and is determined to be in compliance with California Uniform Fire Code 1103.2.1.4.2.

FusionGuard process ensures that all components of the under supports are coated with a zinc-rich primer. Under supports treated with FusionGuard resist rust four times longer than conventional powder coat finishes in independent testing.

Color
This product is available in the following colors: Black, Blue, Bronze, Brown, Burgundy, Camel, Evergreen, Grey, Navy, Orange, Purple, Red, Silver, Teal, Vanilla, White, and Yellow.

Assembly
Table requires minor assembly. Stainless steel assembly hardware is included.

Maintenance
The product is virtually maintenance-free and requires only periodic cleaning with a sponge and a solution of mild detergent and water to remove surface dirt. Do not clean with solvent or petroleum based products.

Warranty
Landscape Fusion products are covered by a seven-year warranty from the date of purchase.

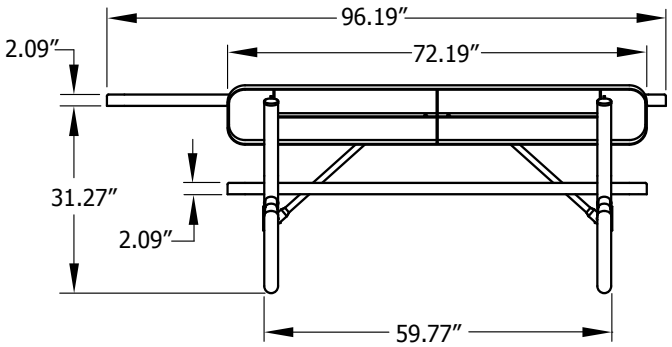

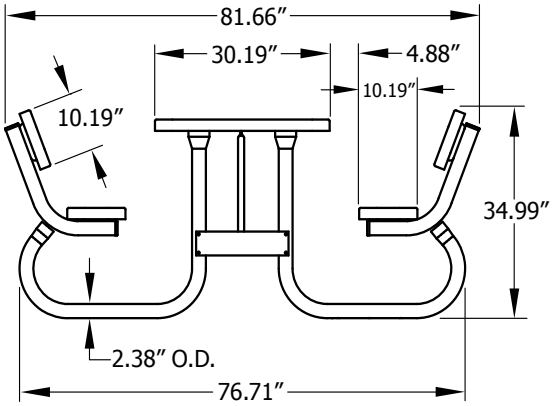

Shipping Information

Unit Wt.	Unit Shipping Wt. UPS	Unit Shipping Wt. Truck (1+ Units)	Unit Ship Size w/Pallet	Max Units per Pallet	Pallet Wt. (98 x 32)	Total No. Pkgs	Shipping Class
361 lbs	NA	389 lbs/unit	33 cu. ft.	5	100 lbs	3	70

Made in USA

Copyright © 2008 Landscape Brands