Landscape BRANDS®

FUSION COATINGS™

F1005 46″ Dia. Round Picnic Table, Expanded Steel, 4 Seats, In Ground Mount
TRI1005 includes Tamper Resistant Hardware

46″ diameter expanded steel picnic table with 4 seats, traditional edge, in ground mount

Accessories

7′ Umbrella	**UMB7**
9′ Umbrella	**UMB9**

Material
The table is 46.25″ in diameter and features four flat bench seats. The tabletop and seats are 3/4″ #9 expanded steel with a diamond shape and feature a traditional edge. Tabletop and seats are plastisol coated with an average thickness of .125″ and are finished with high-gloss patented TopCoat®. The table also features a 1.56″diameter umbrella hole in the center. The tabletop is designed to support 100 lbs per square foot and the seats will support 200 lbs per linear foot.

The seat supports are made of 2.38″ O.D. steel tubing protected with FusionGuard® rust protection. Frame is 4″ square tube with FusionGuard rust protection and is designed to be mounted 26.06″ deep for a sturdy support.

Finish
TopCoat patented high-gloss finish resists UV deterioration, mildew, staining and fading.

The TopCoat finish has been tested to the requirements of ASTM E 1354 and is determined to be in compliance with California Uniform Fire Code 1103.2.1.4.2.

FusionGuard® primer is applied to all of the under supports, providing extreme rust fighting protection and durability. Under supports treated with FusionGuard exceed industry standard by more than 30% in testing by independent sources.

Color
This product is available in the following colors: Black, Blue, Bronze, Brown, Burgundy, Camel, Charcoal, Evergreen, Grey, Navy, Orange, Purple, Red, Sage, Silver, Teal, Vanilla, White, and Yellow.

Assembly
Table requires some assembly. Stainless steel assembly hardware is included. In ground installation requires site preparation and construction of a temporary support.

TRI1005 model includes tamper resistant and stainless steel assembly hardware.

Maintenance
The product is virtually maintenance-free and requires only periodic cleaning with a sponge and a solution of mild detergent and water to remove surface dirt. Do not clean with solvent or petroleum based products.

Warranty
Fusion Coatings® products are covered by a seven-year warranty from the date of purchase.

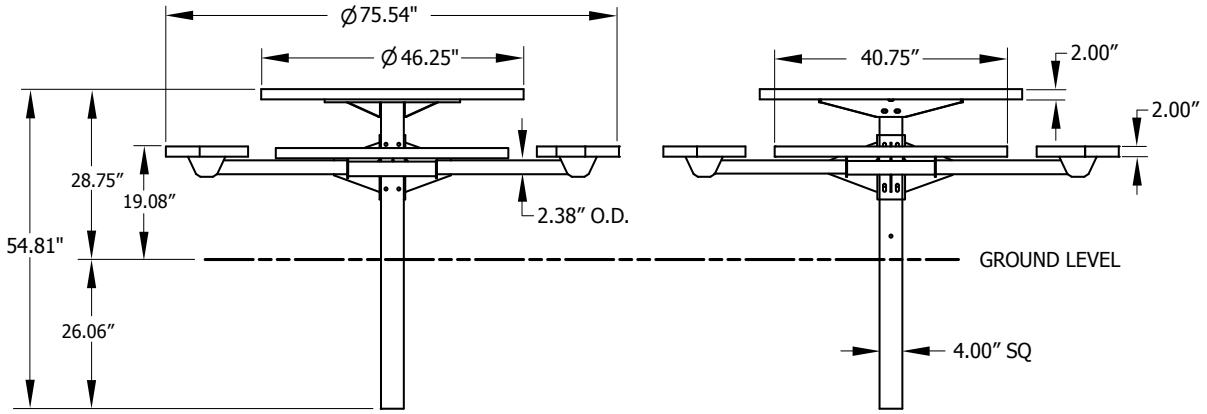

Shipping Information

Unit Wt.	Unit Shipping Wt. UPS	Unit Shipping Wt. Truck (1+ Units)	Unit Ship Size w/Pallet	Max Units per Pallet	Pallet Wt. (58x48)	Total No. Pkgs	Shipping Class
235 lbs	NA	253 lbs/unit	45 cu. ft.	3	50 lbs	4	70

Made in USA

Revised: 05/10-1

Copyright © 2010 Landscape Brands